ORiSTO

OR00-BU-40...

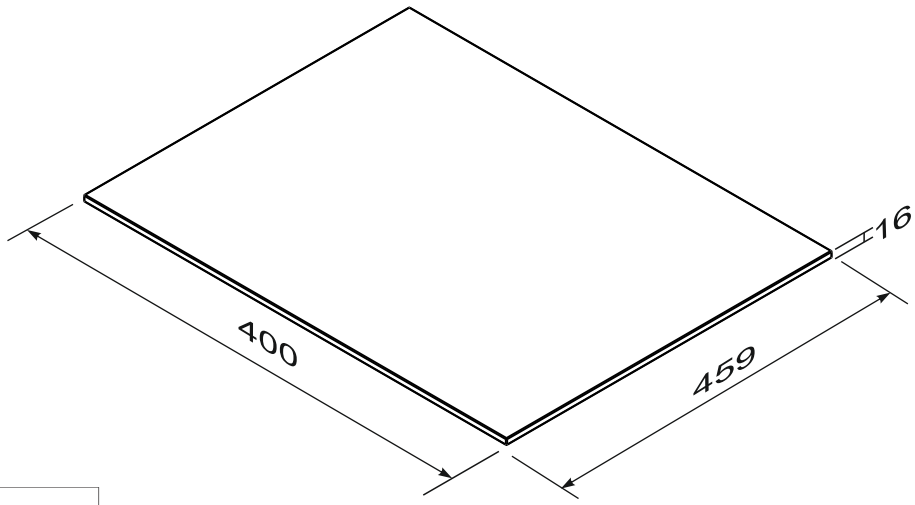

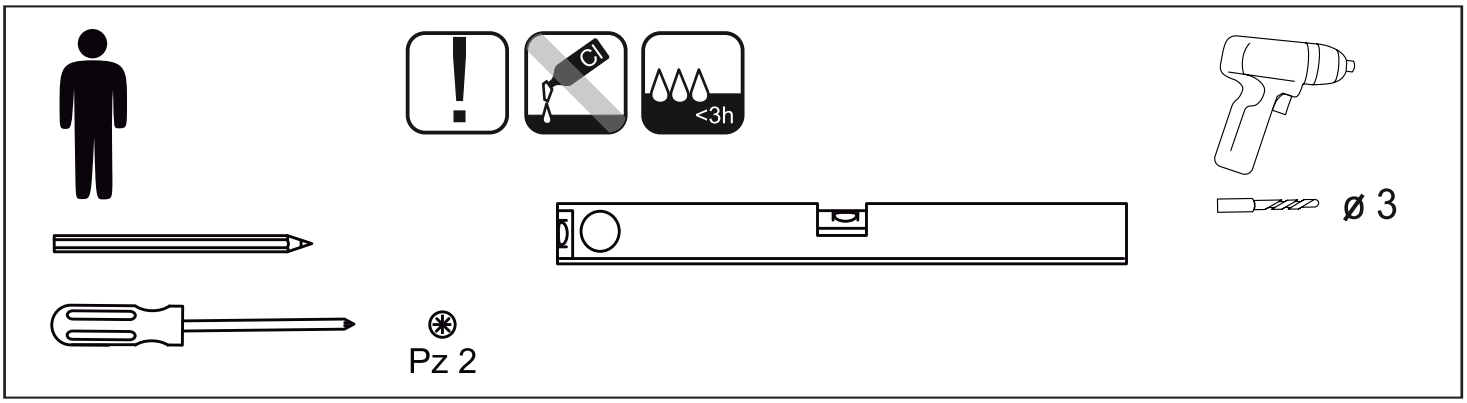

OR..-SN1S-40...

+

OR00-BU-40...

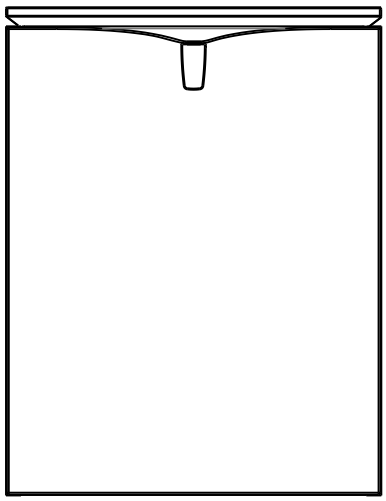

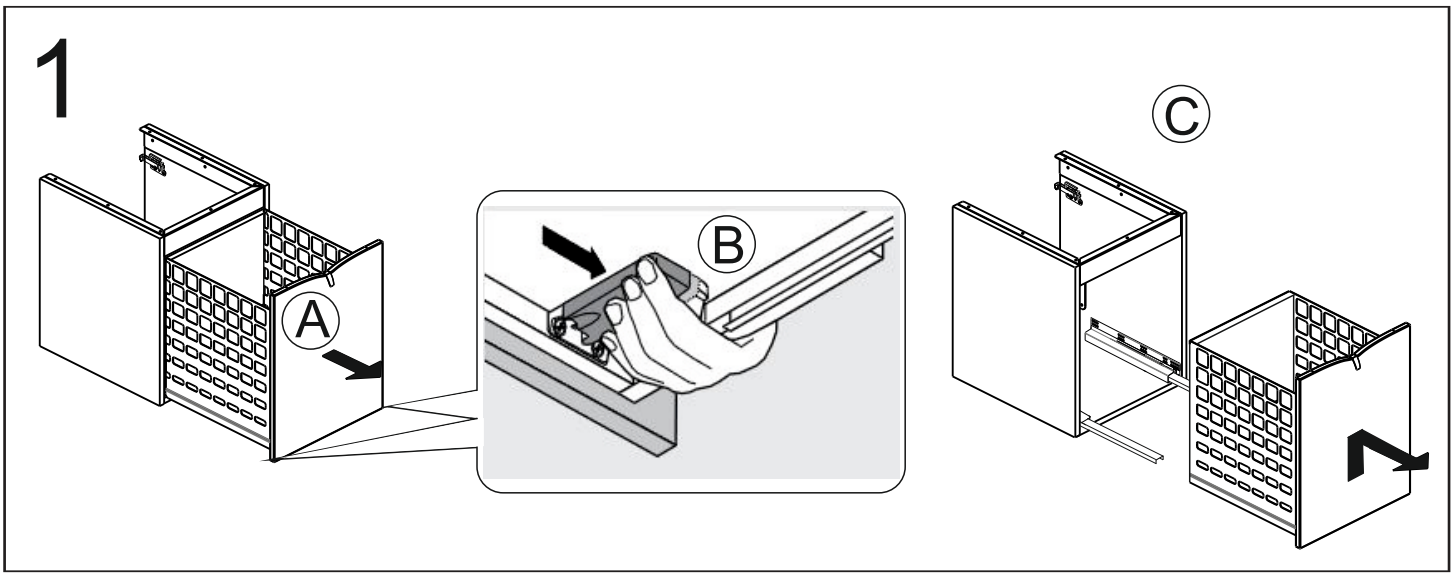
1
A
B
C

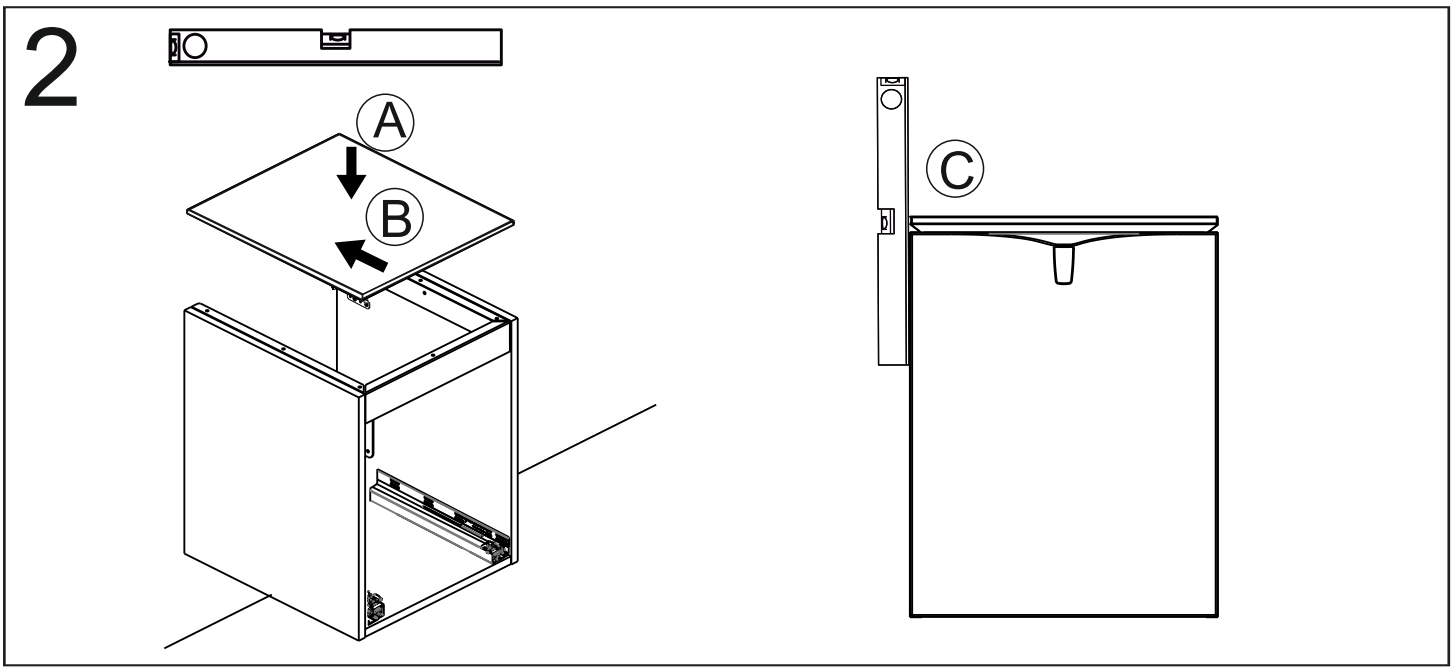
2
A
B
C

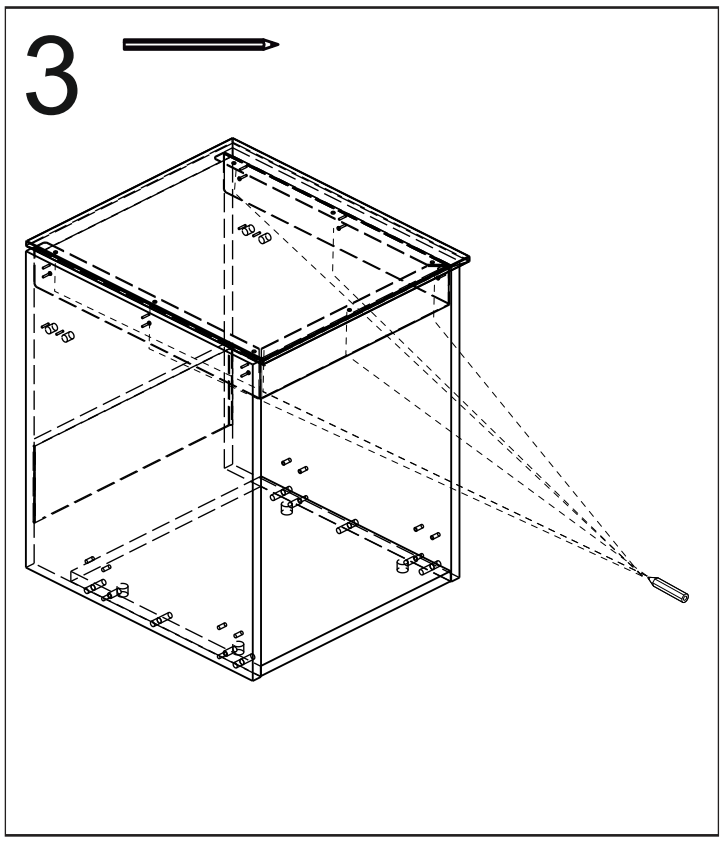
3

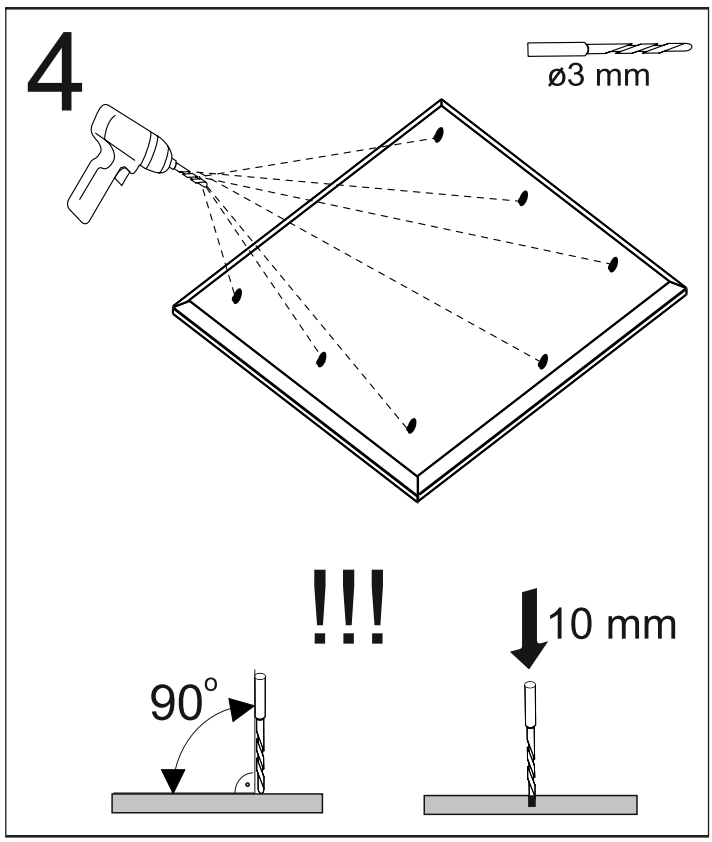
4
ø3 mm
!!!
10 mm
90°

5

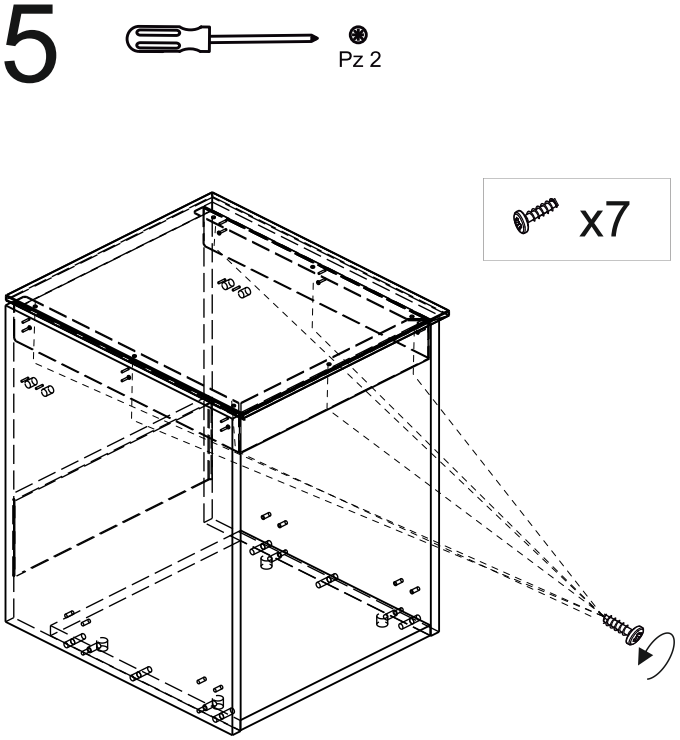

6

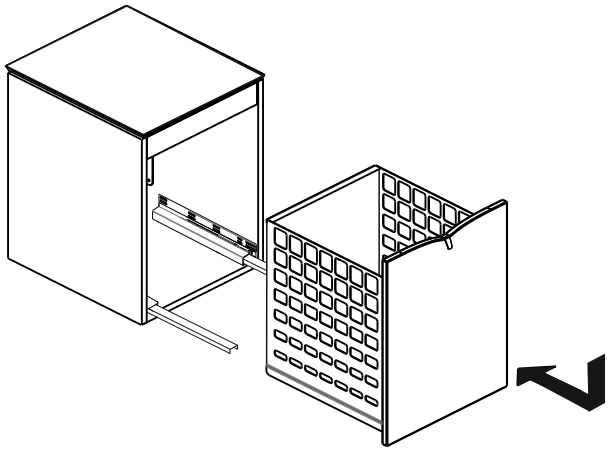

7

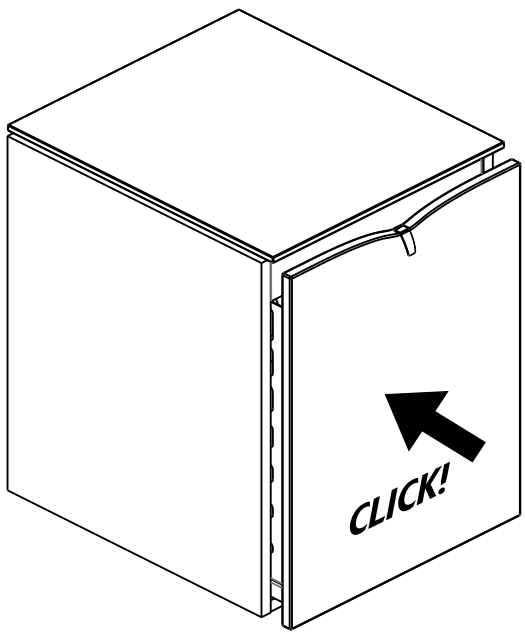

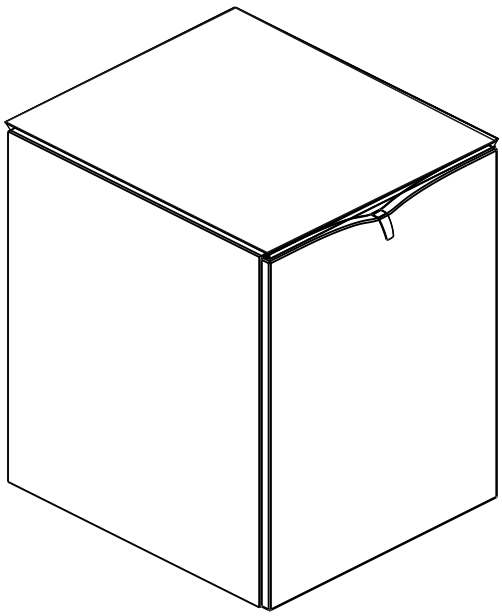

2021-11-05
189924-02